SPECIFICATION APPLIED

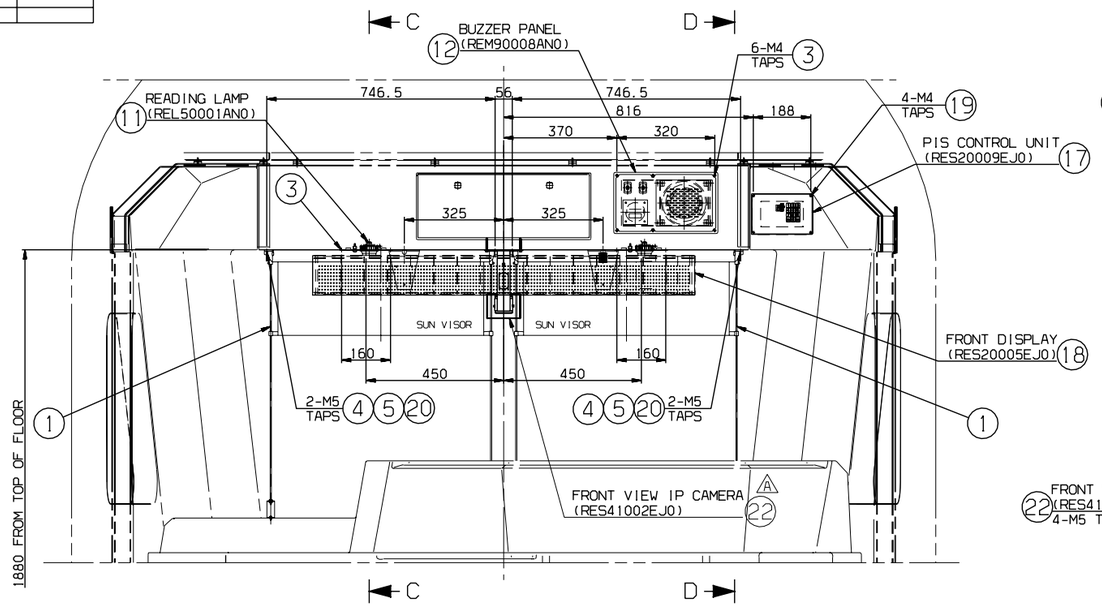

SECTION A-A

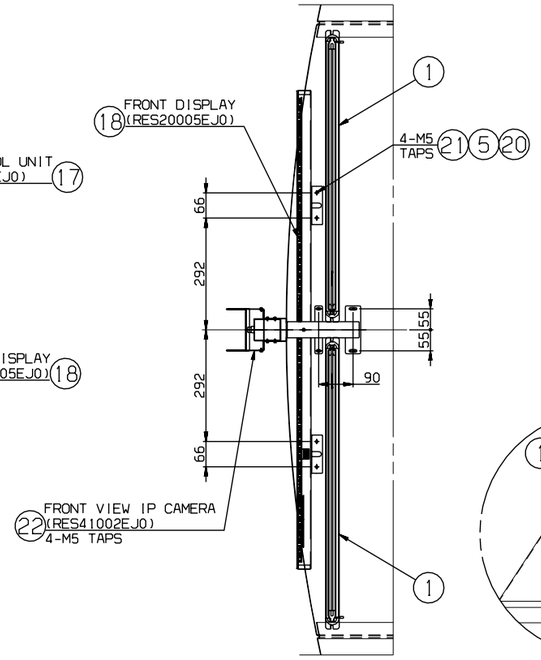

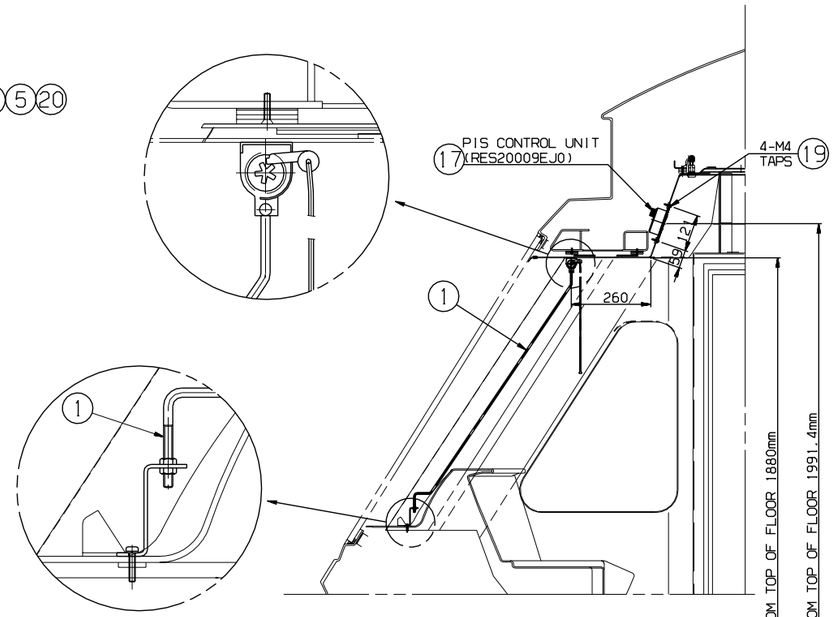

SECTION D-D

Ⓐ VIEW F-F
(SCALE=1/8)

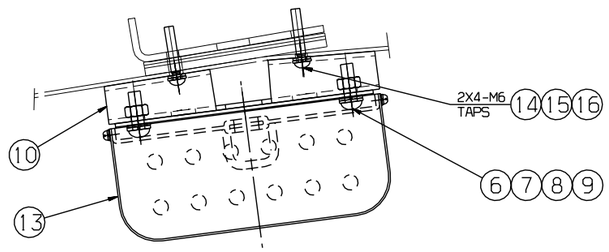

SECTION E-E
(SCALE=1/2)

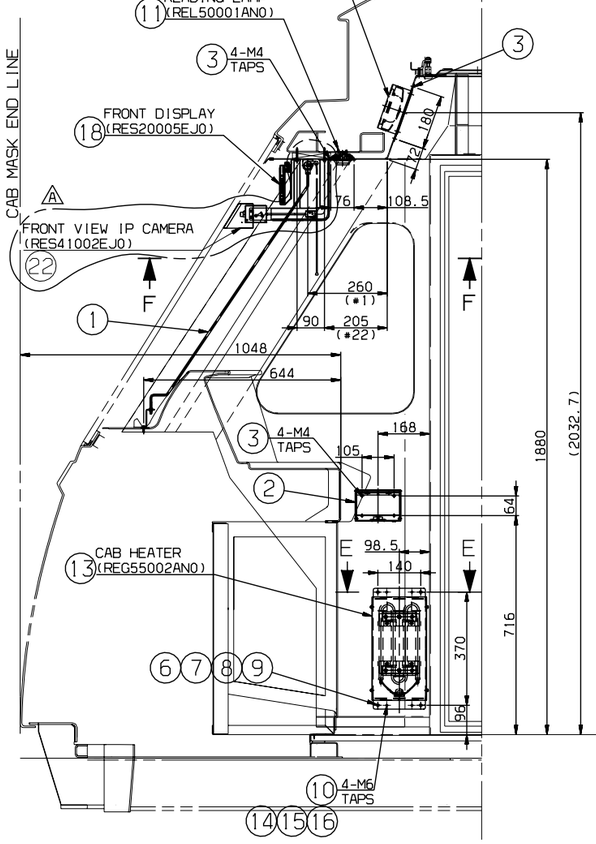

SECTION B-B

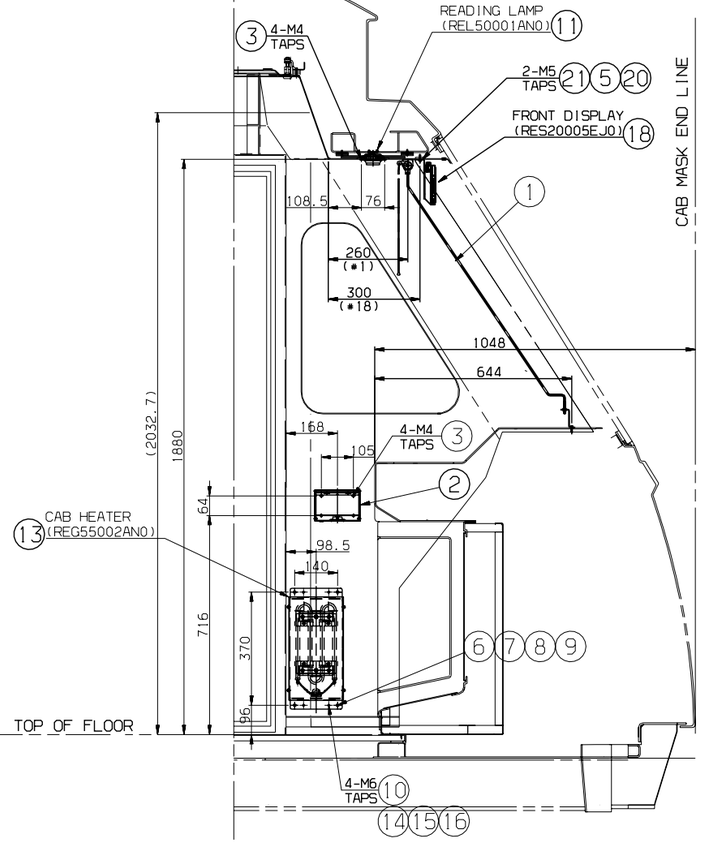

SECTION C-C

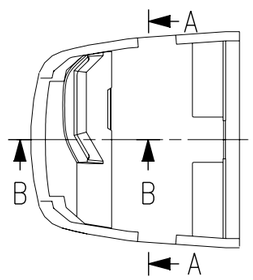

KEY PLAN

Ⓐ 22	RES41002EJ0	CAMERA,FRONT	ASSY	1		
21	RS60610-090S	SCREW,R.H	SUS304	4		M5X20
20	RS60801-005S	WASHER,SPRING	SUS304	8		M5
19	RS60610-070S	SCREW,R.H	SUS304	4		M4X20
18	RES20005EJ0	DISPLAY,FRONT	ASSY	1		
17	RES20009EJ0	UNIT,CONTROL,PIS	ASSY	1		
16	RS60801-006S	WASHER,SPRING	SUS304	8		M6
15	RS60807-009S	WASHER,PLAIN	SUS304	8		M6
14	RS60610-113S	SCREW,R.H	SUS304	8		M6X35
13	REG55002AN0	HEATER CAB	ASSY	2		
12	REM90008AN0	BUZZER PANEL	ASSY	1		
11	REL50001AN0	READING LAMP	ASSY	2		
10	RFC50003AN0	BRACKET,CAB HEATER	ASSY	2		
9	RS60401-008S	NUT,HEX	SUS304	8		M8
8	RS60807-010S	WASHER,PLAIN	SUS304	8		M8
7	RS60801-007S	WASHER,SPRING	SUS304	8		M8
6	RS60610-131S	SCREW,R.H	SUS304	8		M8X25
5	RS60807-008S	WASHER,PLAIN	SUS304	8		M5
4	RS60610-092S	SCREW,R.H	SUS304	4		M5X30
3	RS60607-100S	SCREW,F.H	SUS304	22		M4X20
2	RFC50002AN0	TRAY,ASH	ASSY	2		
1	RFC71001AN0	SUN VISOR ASS'Y	ASSY	2		

품번 NO.	부품 번호 PART NO.	품명 DESCRIPTION	재질 MATERIAL	수량 Q'TY	검증 V.T	비고 REMARKS

승인 APP	JeongYul Lee 2014.09.15	재질 MAT'L	ASSY	명칭 TITLE	INSTALLATION,FRONT WALL EQUIPMENT
검도 CHK	KeongBong Park 2014.09.15	중량 G.W		도면 번호 DRG. NO	RFC50001EJ0 Ver. 00 Rev. -A
설계 DGN	JinYoo Jeong 2014.09.15	일반공차 MC / MD / CT		SCALE	1/10 SHEET 1 of 1
제도 DRG	JinHee Jeong 2014.09.10	B			SIZE A1
		참조번호 REF. NO.	FCP03636		

기호 MARK	일자 DATE	변경 내역 DETAIL OF REVISION(E.C ZONE)	설변번호 E.C NO.	설계 DGN	검도 CHK	승인 APP
Ax4	2015.01.25	ADDED PART NO. *22 (FRONT CAMERA) ADDED VIEW F-F	RSD1402-U085	H.U.LEE	J.W.BAE	H.G.RYU

HYUNDAI Rotem 현대로템주식회사

본 도면은 당사 재산권에 해당하며 무단복사/배포 금지됨. PROPERTY OF ISSUING ENTITY. CANNOT BE DISTRIBUTED OR REPRODUCED WITHOUT AUTHORIZATION.

CATIA